SIRIUS M GEN2

Sirius M Gen2 is the medium-sized model in the energy-efficient street luminaire series. The updated Sirius luminaire family was designed to suit varying weather conditions. The luminaire family has a sleek and consistent new appearance, and it is easy to keep clean. Sirius' timeless Scandinavian design suits areas built in different time periods. Sirius combines good looks, durable materials and practicality. Sirius M Gen2 luminaires are suitable for various applications such as highways, urban and residential streets, parks and outdoor/sporting routes.

Benefits

Reliable outdoor luminaire family with a clear and unanimous industrial design from parkways to highways. High IP66 class combined with durable impact resistant structure (IK09). Wide selection of different lenses covering different lighting needs and pole spacings. SIRIUS luminaire combines low glare values and small cost-of-ownership.

Suitability

Streets of residential areas, collecting roads and city streets. Foothpaths, bicycling tracks and parks.¡In addition for area and wall wash lighting.

TEHTY SUOMESSA
MADE IN FINLAND

GREENLED

Product families and variants

MODEL	TYPE CODE	POWER	POWER TUNING RANGE[1)]	LUMINOUS FLUX	LUMINAIRE EFFICACY	LIFETIME	OPERATING TEMPERATURE	OPTICAL SAFETY DISTANCE[2)]
SIRIUS 14M GEN2	GLS2G14M	15 W	20-100%	2040 lm	145 lm/W	L98, C10 100 000 h	-40 - +45°C	0 m
SIRIUS 27M GEN2	GLS2G27M1	28 W	10-100%	3770 lm	137 lm/W	L98, C10 100 000 h	-40 - +45°C	1.3 m
SIRIUS 27M GEN2	GLS2G27M2	27 W	10-100%	4080 lm	154 lm/W	L98, C10 100 000 h	-40 - +45°C	0 m
SIRIUS 41M GEN2	GLS2G41M2	41 W	7-100%	5820 lm	145 lm/W	L98, C10 100 000 h	-40 - +45°C	1.7 m
SIRIUS 41M GEN2	GLS2G41M3	41W	7-100%	6130 lm	155 lm/W	L98, C10 100 000 h	-40 - +45°C	0 m
SIRIUS 67M GEN2	GLS2G67M3	66 W	8-100%	9630 lm	145 lm/W	L98, C10 100 000 h	-40 - +45°C	2.0 m
SIRIUS 67M GEN2	GLS2G67M4	67 W	8-100%	10000 lm	152 lm/W	L98, C10 100 000 h	-40 - +45°C	0 m
SIRIUS 88M GEN2	GLS2G88M4	88 W	15-100%	12840 lm	145 lm/W	L98, C10 100 000 h	-40 - +45°C	2.3 m
SIRIUS 88M GEN2	GLS2G88M5	81 W	15-100%	12370 lm	153 lm/W	L98, C10 100 000 h	-40 - +45°C	0 m
SIRIUS 110M GEN2	GLS2G110M	110 W	17-100%	16030 lm	145 lm/W	L98, C10 100 000 h	-40 - +35°C	2.3 m

Notes:

All values in ambient temperature of +25°C with CCT 4000K and light distribution 08, luminous flux tolerance +-10%, output power tolerance +-10%.

ULOR=0

1. Dimming range is a subject to change, if output power optimization has been done. Tolerance of the dimming range ±10%
2. The luminaire should be positioned so that prolonged staring into the luminaire at a distance closer than optical safety distance is not expected

Luminous flux factors:
LED 3000K CRI70 = 0,91
LED 5000K CRI70 = 1,00

Dimensions

MODEL	TYPE CODE	LENGTH (L)	HEIGHT (H)	WIDTH (W)	WEIGHT
SIRIUS 14M GEN2	GLS2G14M	550 mm	75 mm	300 mm	7 kg
SIRIUS 27M GEN2	GLS2G27M1	550 mm	75 mm	300 mm	7 kg
SIRIUS 27M GEN2	GLS2G27M2	550 mm	75 mm	300 mm	7 kg
SIRIUS 41M GEN2	GLS2G41M2	550 mm	75 mm	300 mm	7 kg
SIRIUS 41M GEN2	GLS2G41M3	550 mm	75 mm	300 mm	7 kg

MODEL	TYPE CODE	LENGTH (L)	HEIGHT (H)	WIDTH (W)	WEIGHT
SIRIUS 67M GEN2	GLS2G67M3	550 mm	75 mm	300 mm	7 kg
SIRIUS 67M GEN2	GLS2G67M4	550 mm	75 mm	300 mm	7 kg
SIRIUS 88M GEN2	GLS2G88M4	550 mm	75 mm	300 mm	7 kg
SIRIUS 88M GEN2	GLS2G88M5	550 mm	75 mm	300 mm	7 kg
SIRIUS 110M GEN2	GLS2G110M	550 mm	75 mm	300 mm	7 kg

General Description

COLOUR TEMPERATURE:	3000 K, 4000 K, 5000 K
COLOUR RENDERING INDEX:	$R_A \geq 70$
IP CLASS:	IP66
IK CLASS:	IK09
SUPPLY VOLTAGE:	198-264 Vac
FREQUENCY:	50-60 Hz
PF:	>0.95
THD:	10%
OVERVOLTAGE PROT.:	10kV L/N-Ground & SD-Ground
CONNECTION:	Luminaire internal terminal block (installation cable as an option)
DIMMABILITY:	ON/OFF, StepDIM, AstroDIM, DALI, MainsDIM (2
COLOUR:	RAL9006, other RAL colors as an option
MATERIAL OF THE LUMINAIRE BODY:	Aluminium
GUARANTEE:	8 years
ACCESSORIES (INSTALLATION):	5206062 T-adapter, 5205037 Pole adapter diam 76 mm -> 60 mm, 3608101 Ceiling bracket, 3608061 Wall bracket, 3608220 Tube bracket
ACCESSORIES (OTHERS):	Protection class II – assembly

Notes:

1) 4kV L-N and¡L/N-Ls, 8kV L/N/Ls-EQUI SIRIUS 110M with Protection class II-assembly

2) SIRIUS 110M ON/OFF, AstroDIM, StepDIM and¡DALI

© 2024 Greenled Oy | Greenled reserves the right to change prodoct details

Light distribution

SIRIUS M 01 740 2v0

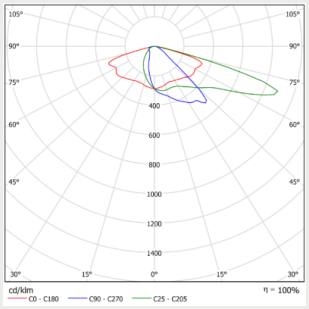

SIRIUS M 02 740 2v0

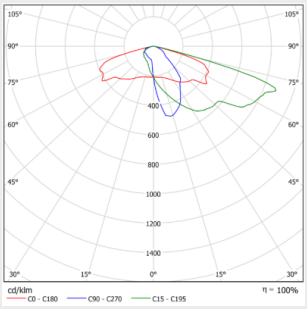

SIRIUS M 03 740 2v0

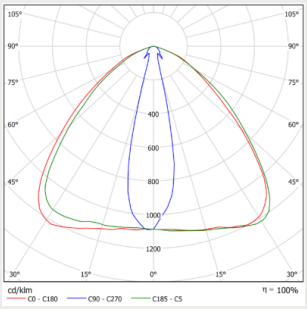

SIRIUS M 04 740 2v0

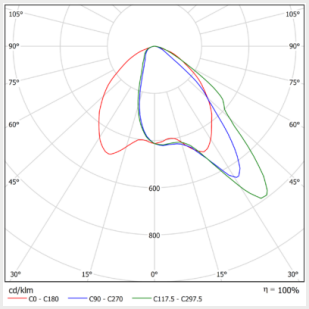

SIRIUS M 05 740 2v0

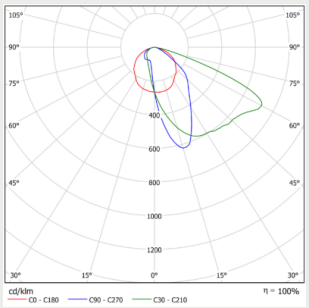

SIRIUS M 06 740 2v0

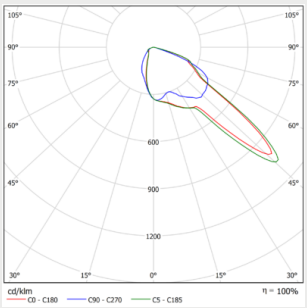

SIRIUS M 07 740 2v0

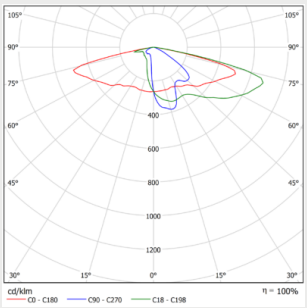

SIRIUS M 08 740 2v0

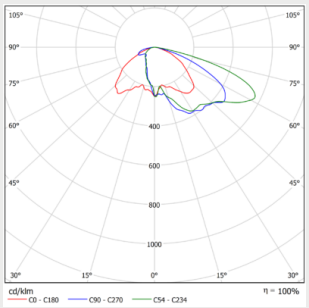

SIRIUS M 09 740 2v0

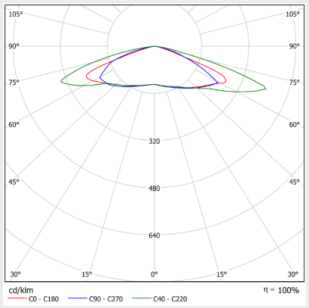

SIRIUS M 10 740 2v0

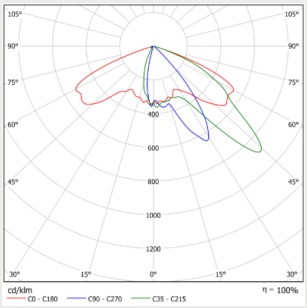

SIRIUS M 12 740 2v0

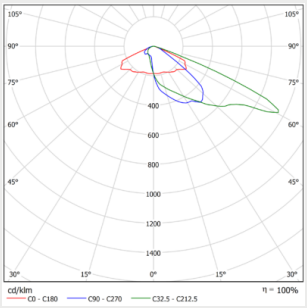

SIRIUS M 13 740 2v0

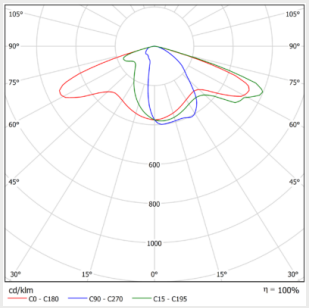

© 2024 Greenled Oy | Greenled reserves the right to change prodoct details

Dimensions

Dimensional drawing

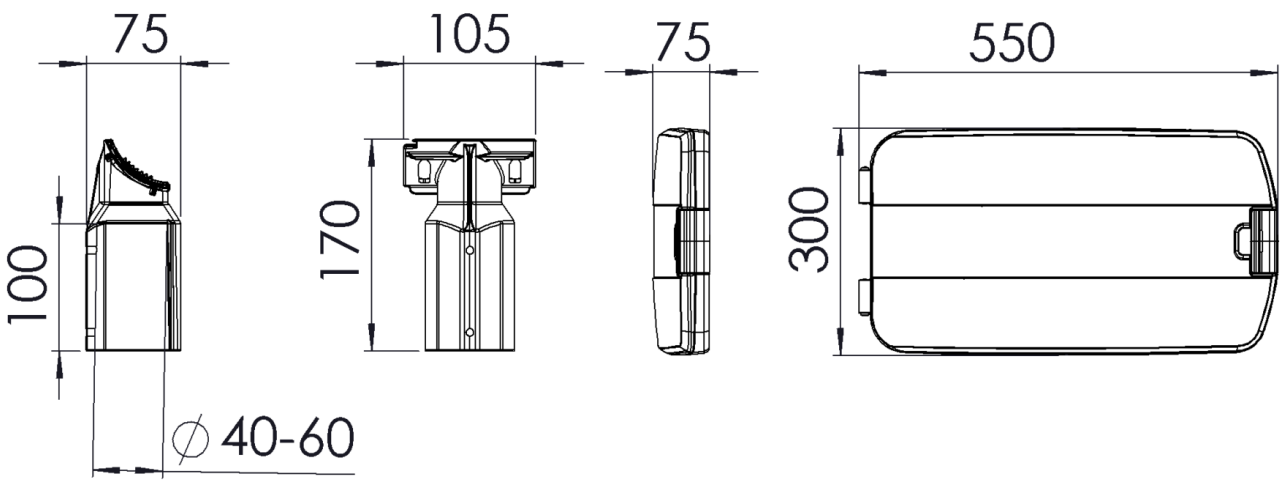

© 2024 Greenled Oy | Greenled reserves the right to change prodoct details

Brackets

5206062 T-adapter

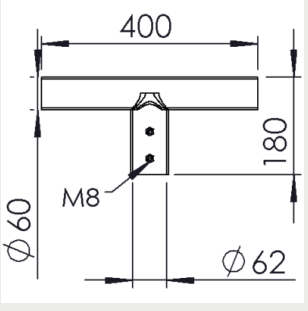

5205037 Pole adapter diam 76 mm -> 60 mm

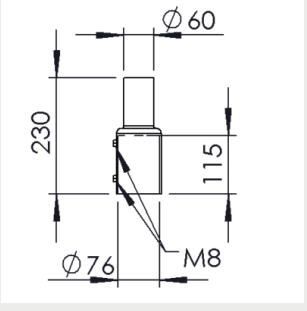

3608101 Ceiling bracket

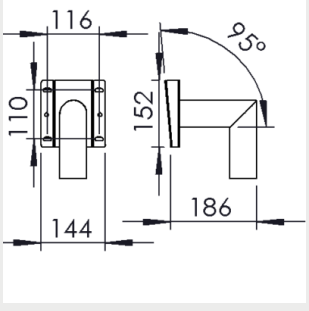

3608061 Wall bracket

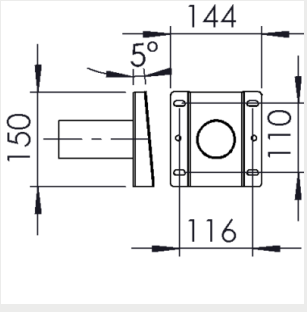

3608220 Tube bracket

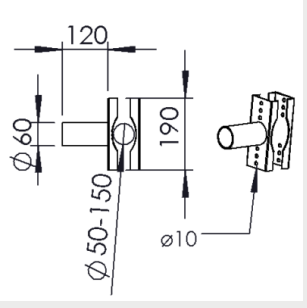

Circuit breakers

	B10	B16	B20	C10	C16	C20
SIRIUS 14M GEN2, SIRIUS 27M GEN2, SIRIUS 41M GEN2	10	20	20	16	27	33
SIRIUS 67M GEN2	7	12	14	11	18	23
SIRIUS 88M GEN2	7	12	14	11	18	23
SIRIUS 110M GEN2	11	19	23	19	31	39

i

CUSTOMER SERVICE:

tel:¡+358 20 125 5800

info@greenled.fi

© 2024 Greenled Oy | Greenled reserves the right to change prodoct details